오일 충만식 압력계 LIQUID FILLED PRESSURE GAUGE

SUMMARY

NP-307 is precipitated on the internal silicone liquid.

It is suitable as a vibration-suppression using the viscous resistance of the pressure measurements in the mechanical vibration and pulsation heavy place.

It can be guarantee the performance and life of the pressure gauge at the maximum because using the lubricity of the liquid to prevent internal wear.

Used in the severe temperature change, vibration, pulsation severe place, various plant site.

Model. NP-307-1

SPECIFICATIONS

- **Diameter :** 60,75,100 and 150mm
- **Accuracy**
  60,75mm : ±1.5 of Full Scale
  100mm : ±1.0 of Full Scale
- **Scale Range :**
  60,75mm : 0.2 ~ 25 MPa
  100,150mm : -0.1 ~ 2MPa, -0.1 ~ 0 MPa, 0~35 MPa
- **Working Pressure :**
  Static Pressure : 75% of Full Scale
  Fluctuating Pressure : 60% of Full Scale
- **Working Temperature**
  Ambient : -20~65℃
  Fluid : -20~80℃
- **Pressure connection :**
  STS 316
- **Element**
  STS 304, STS 316
  C Type Bourdon Tube or Helical Tube
- **Case**
  STS 304
- **Cover**
  STS 304
  Slip-on-Fit
- **Window**
  Safety Glass
- **Movement**
  STS 304
- **Dial**
  Aluminum
  White Coating
- **Pointer**
  Aluminum
  Black Coating
- **Type :**
  NP-307-1 (Rimless Type)
  NP-307-2 (Surface Type)
  NP-307-3 (Flush Mounting Type)
  NP-307-4 (Panel attachment Type)
- **Process connection :**
  60mm : UNF 7/16, 1/8", 1/4 PT & NPT, PF
  75mm : UNF 7/16, 1/4", 3/8 PT & NPT, PF
  100mm : UNF 7/16, 1/4", 3/8", 1/2" PT & NPT, PF
  150mm : UNF 7/16, 1/4", 3/8", 1/2" PT & NPT, PF
- **Filling Liquid :**
  Silicon Oil
  Glycerine Oil
- **Option**
  Bracket, Throttles, Accessories

오일 충만식 압력계 LIQUID FILLED PRESSURE GAUGE

DIMENSION

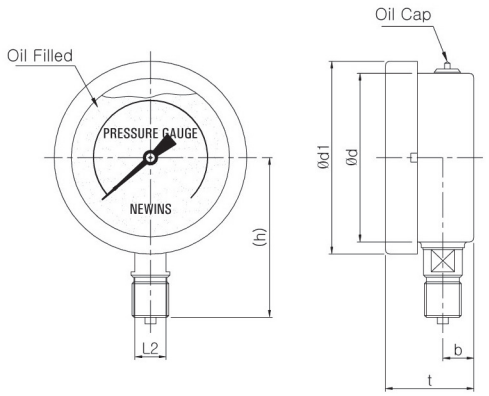

Model. NP-307-1(A)

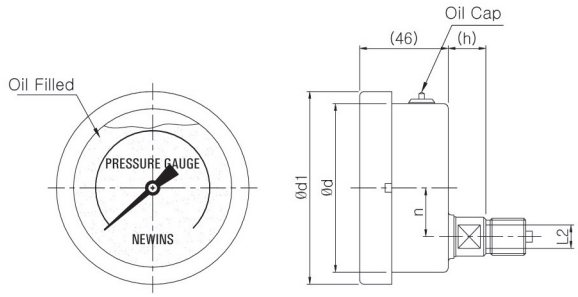

Model. NP-307-3(D)

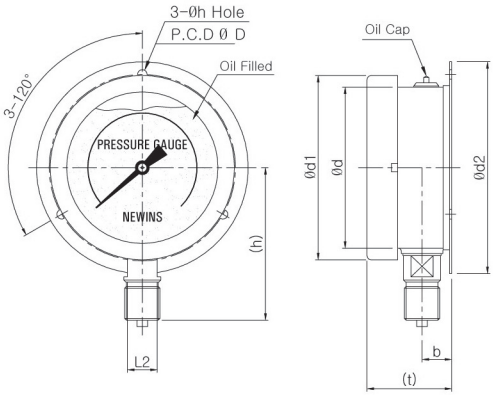

Model. NP-307-2(B)

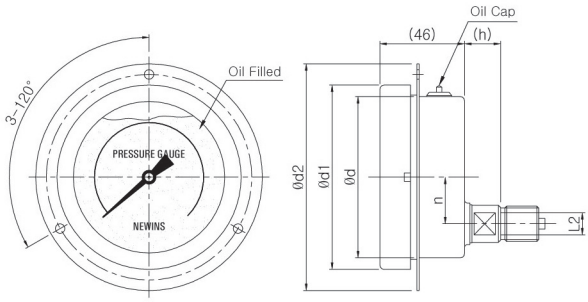

Model. NP-307-4(BD)

STANDARD SPECIFICATIONS

Dimensions (mm)

Dial	Model No.	Ød	Ød1	Ød2	b	n	t	L2	h	Øh	ØD
60	NP-307-1(A)/2(B)	64	72	84	12	-	(39)	12	(48)	4.5	72
	NP-307-3(D)/4(BD)			90	-	17			(20)		81
75	NP-307-1(A)/2(B)	77	87	100	14	-	(40)	14	(54)	4.5	88
	NP-307-3(D)/4(BD)			107	-	22			(17)		97
100	NP-307-1(A)/2(B)	100	114	128	17	-	(46)	17	(76)	5.5	115
	NP-307-3(D)/4(BD)			135	-	33			(26)		120
150	NP-307-1(A)/2(B)	152	168	188	17	-	(50)	17	(100)	5.5	174
	NP-307-3(D)/4(BD)				-	33			(26)		