Euro gauge
Electrical contact type diaphragm pressure gauge
Model: P570 series

Spec. sheet no. PD05-08

Service intended
P570 series are equipped with a specially designed dry-type diaphragm, and also equipped with the electrical contact block which allows all the combinations of contact to be used. The contact block is mounted on the dial, and the window is fitted with a knob for the external adjustment or the set point.

Nominal diameter
100 and 160 mm

Accuracy
±1.0 % of full scale

Scale range (MPa, kPa, bar)
0 ~1 kPa to 0 ~ 40 kPa (Flange 150 mm)
0 ~ 50 kPa to 0 ~ 2.5 MPa (Flange 100 mm)

Working pressure
Steady : Full scale value
Fluctuating : 90 % of full scale value

Over range protection
Overpressure safety 500% of full scale value, however Max. 4 MPa

Working temperature
Ambient : -20 ~ 65 °C
Fluid : Max. 100 °C

Degree of protection
EN60529/IEC529/IP67

Temperature effect
Accuracy at temperature above and below the reference temperature (20 ℃) will be effected by approximately ±0.4 % per 10 ℃ of full scale

Standard features

Pressure connection and under flange
Material : 304SS, 316SS, 316L SS

Upper flange (Gauge side)
Material : 304SS, 316SS

Diaphragm material
≤40 kPa stainless steel (316Ti SS)
＞40 kPa duratherm 600

Case
Stainless steel (304SS)

Cover
Stainless steel (304SS)
Bayonet type

Window
Safety glass : Only available with diameter 100 mm
Polycarbonate : 100 and 160 mm

Movement
Stainless steel

Dial
White aluminium with black graduations

Pointer
Black painted aluminium alloy

Conduit connection
M20 x 1.5

1. Base model

P571	Screwed process connection
P572	"I" type flange process connection

2. Nominal diameter and window material

4	100 mm and safety glass
5	100 mm and polycarbonate window
6	160 mm and polycarbonate window

3. Contact function

1	High alarm, Normal open contact
2	High and low alarm
3	Low alarm, Normal close contact
4	Two high alarm
5	Two low alarm
6	Failsafe high and low alarm

4. Process connection

XX	Refer to process connection type table

5. Flange material

B	304SS
D	316SS
E	316L SS

6. Unit

H	bar
I	MPa
J	kPa
S	mbar

7. Range

XXX	Refer to pressure unit and range table

8. Liquid filling

0	None

9. Option

0	None
1	Accessories

1	2	3	4	5	6	7	8	9	
P571	**6**	**1**	**XX**	**D**	**H**	**XXX**	**0**	**0**	**Sample ordering code**

P57X : Type of mounting (Polycarbonate window 1/2)

P571

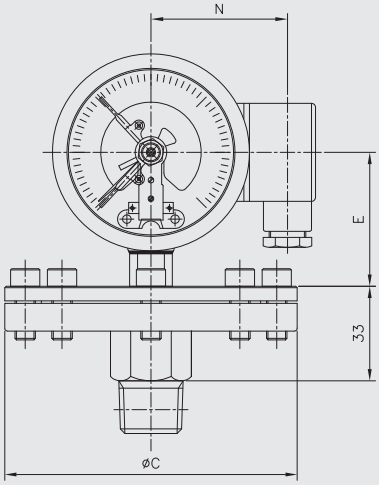

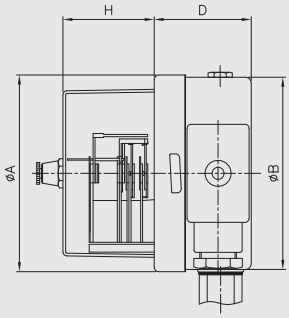

P572

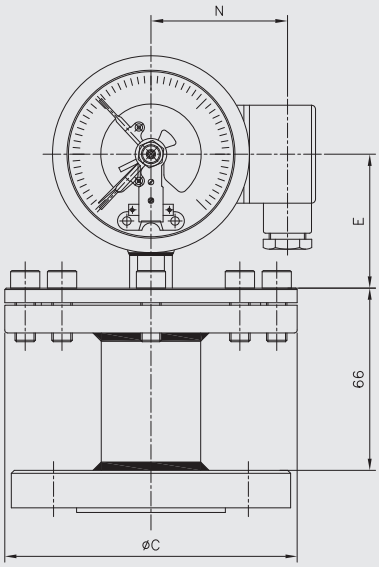

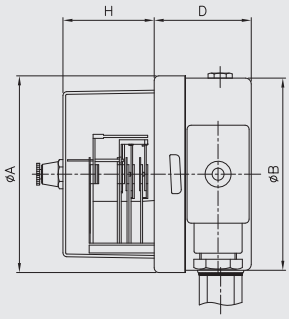

Dimensions (mm)

Dial size	A	B	$D^{\pm 2}$	$E^{\pm 2}$	H	N	C	
							≤ 40kPa	> 40kPa
100	101.3	99	50	78	34.5	75	150	100
160	160.6	159	52.5	108	34	105		

P57X : Type of mounting (Safety glass window 2/2)

P571

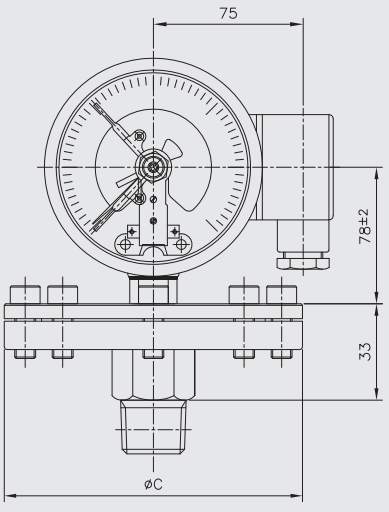

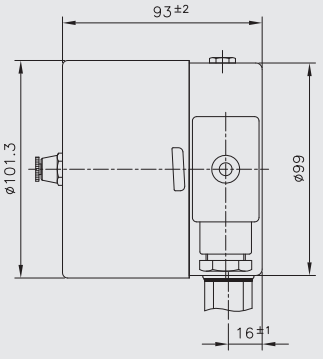

P572

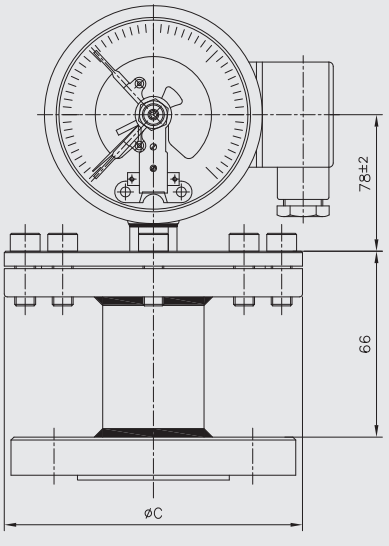

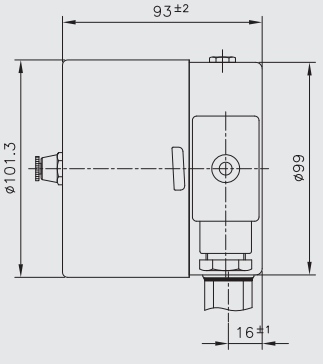

Dimensions (mm)

Dial size	C	
	≤ 40kPa	> 40kPa
100	150	100

Snap - action contacts

General

Electromechanical limit switches in pointer type measuring instruments are auxiliary current switches which open or close electrical circuits at set limit values by means of a contact arm which is moved by the actual value pointer.
The snap action contact is a mechanical contact for switching capacities up to 30 W 50 VA max.
Contact making will be delayed and or advanced in relation to the movement of the actual value pointer.
To closed the circuit, the contact pin of the movable contact arm is attracted in a jump by the permanent magnet fastened to the supporting arm shortly before the set value has been reached.
Due to the retention force of the magnet, snap action contacts are more resistant against shock and vibration.
The switching safety is increased by the increased contact pressure.
When the circuit is opened, the magnet keeps the contact arm in its place until the restoring force of the measuring element exceeds the magnetic force, and the contact opens in a jump.

Specifications

Maximum contact rating with non-inductive (ohmic) load		**Electric contacts type pressure gauge model P570 series**	
		Dry gauges	**Liquid filled gauges**
Maximum voltage		250 V	250 V
Current ratings	**Make ratings**	1.0 A	1.0 A
	Break ratings	1.0 A	1.0 A
	Continuos load	0.6 A	0.6 A
Maximum load		30 W 50 VA	20 W 20 VA
Material of contact points		Silver-nickel alloy (80 % Ag / 20 %Ni / 10 µm) gold-plated	
Ambient operating temperature		-20 °C...+70 °C	
Max. no. of contacts		2	
Voltage test		Circuit / protective earth conductor - 2,000 vac 1 minute	
		Circuit /circuit - 2,000 vac 1 minute	

Recommended contact ratings with ohmic and inductive load

Voltage (DIN IEC 38) DC / AC	**Electric contacts type pressure gauge model P570 series**					
	Dry gauges			**Liquid filled gauges**		
	Ohmic load		inductive load	Ohmic load		inductive load
	DC	AC		DC	AC	
			cosØ > 0.7			cosØ > 0.7
V	mA	mA	mA	mA	mA	mA
220 / 230	100	120	65	65	90	40
110 / 110	200	240	130	130	180	85
48 / 48	300	450	200	190	330	130
24 / 24	400	600	250	250	450	150

In order to ensure a high switching reliability of the contacts the switching voltage should not be below 24 V, also taking environmental influences in the long term into account.

Contact function table

Code	Wiring scheme		Contact function		Wiebrock code no.	Slot sensor
			1st contact	2nd contact		
Single Contact						
1	Contact make when pointer reachse setpoint (Normal open - NO)	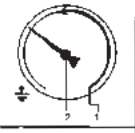			S/M-1	Normal use high alarm system
3	Contact break when pointer reachse setpoint (Normal close - NC)	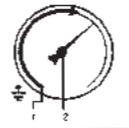			S/M-2	Normal use low alarm system
Double Contact - Common Circuit						
4	1st and 2nd contact make when pointer reaches setpoint				S/M-11	Normal use high and hihigh alarm system
6	1st contact make 2nd contact break when pointer reaches setpoint	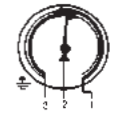		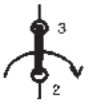	S/M-12	Normal use failsafe high and low alarm system
2	1st contact break 2nd contact make when pointer reaches setpoint	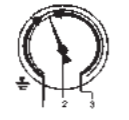			S/M-21	Normal use high and low alarm system
5	1st and 2nd contact break when pointer reaches setpoint	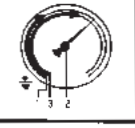			S/M-22	Normal use low and lolow alarm system

Terminal block arrangement

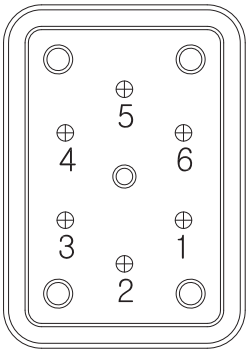

1. High alarm (S/M-1)

① Normal open
② Common
④ Ground

2. High and low alarm (S/M-21)

Low alarm

① Normal close
② Common
④ Ground

High alarm

② Common
③ Normal open

3. Low alarm (S/M-2)

① Normal close
② Common
④ Ground

4. Two high alarm (S/M-11)

No.1 High alarm

① Normal open
② Common
④ Ground

No.2 High alarm

② Common
③ Normal open

5. Two low alarm (S/M-22)

No.2 Low alarm

① Normal close
② Common
④ Ground

No.1 Low alarm

② Common
③ Normal close

6. Failsafe high and low alarm (S/M-12)

High alarm

② Common
③ Normal close
④ Ground

Low alarm

① Normal open
② Common

Pressure unit and range table

Range and code	Unit and code				
	J : kPa	S : mbar	H : bar	I : MPa	Diaphragm material
797	0 ~ 1	0 ~ 10	X	X	316Ti (130Ø)
817	0 ~ 2.5	0 ~ 25	X	X	
826	0 ~ 4	0 ~ 40	X	X	
828	0 ~ 5	0 ~ 50	X	X	
830	0 ~ 6	0 ~ 60	X	X	
792	0 ~ 10	0 ~ 100	X	X	
810	0 ~ 16	0 ~ 160	X	X	
793	0 ~ 20	0 ~ 200	X	X	
818	0 ~ 25	0 ~ 250	X	X	
820	0 ~ 30	0 ~ 300	X	X	
130	0 ~ 40	0 ~ 400	0 ~ 0.4	X	
040	0 ~ 50	0 ~ 500	0 ~ 0.5	X	Duratherm 600 (75Ø)
131	0 ~ 60	0 ~ 600	0 ~ 0.6	X	
041	X	X	0 ~ 1	0 ~ 0.1	
042	X	X	0 ~ 2	0 ~ 0.2	
134	X	X	0 ~ 2.5	0 ~ 0.25	
043	X	X	0 ~ 3	0 ~ 0.3	
045	X	X	0 ~ 6	0 ~ 0.6	
143	X	X	0 ~ 16	0 ~ 1.6	
052	X	X	0 ~ 25	0 ~ 2.5	

O : Available X : Not available

Process connection type table - 8th and 9th characters

	8th character	9th character			
Code	Connection size	For model P571		For model P572	
		Code	Connection type	Code	Flange rating
C *	¼"	PF	PF	KA	JIS 5K RF
D *	⅜" (10A)	AB	PT	AC	B16.5 Class 150 RF
E	½" (15A)	AA	NPT	AE	B16.5 Class 150 FF
F	¾" (20A)	FF	BSPT	AD	B16.5 Class 150 RFSF
G	1" (25A)	GG	BSPF	AF	B16.5 Class 300 RF
H	1¼" (32A)	HH	NPS	AH	B16.5 Class 300 FF
J	1½" (40A)	JJ	M	AG	B16.5 Class 300 RFSF
K	2" (50A)			AJ	B16.5 Class 600 RF
L	2½" (65A)			KT	JIS 5K FF
M	3" (80A)			AL	B16.5 Class 600 FF
N	4" (100A)			AK	B16.5 Class 600 RFSF
Z	Other			KL	JIS 10K RF
				KN	JIS 10K FF
				KM	JIS 10K RFSF
				KP	JIS 20K RF
				KR	JIS 20K FF
				KQ	JIS 20K RFSF
				KC	JIS 30K RF
				KU	JIS 30K FF
				KJ	JIS 30K RFSF
				AS	B16.5 Class 900 RF
				KD	JIS 40K RF
				KV	JIS 40K FF
				A8	B16.5 Class 150 RTJ
				A9	B16.5 Class 300 RTJ
				AV	B16.5 Class 600 RTJ
				ZZ	Other

* Code C and D, only available with model P571